DURA X MAX®
The Front Runner of Brake Parts
The Brand, Shaping The Future of SAFETY

DURAMAX®

The Brand, Shaping The Future of SAFETY

ABOUT

DuraMax manufactures Air Spring and Piston type actuators for both S-Cam and Disc brakes. Through OEM channels, DuraMax distributes products that are known for long-lasting durability and reliable performance throughout the commercial transit, vocational fleet and trucking industries.

MISSION

Millions of miles on the road have given Duramax the experience to understand how to achieve the highest level of customer satisfaction. We promise and to support all our customer industries with our unwavering quality, reliability and continuity throughout our product offerings.

To accomplish our mission, DuraMax employs stringent processes for continued quality improvement. Using CAD, CAM and 3D design engineering, state-of-the-art facilities and materials research engineering, we execute our proven workflow processes with the goal of outstanding customer service at competitive prices.

OPERATIONS

DuraMax has several manufacturing facilities throughout the world, some of which they share with sister companies in related industries. At present there are two dedicated ISO-Certified manufacturing and facilities in South Korea, as well as two in mainland China.

Currently, DuraMax has a U.S. presence in Atlanta, GA. where headquarter marketing and customer support. Plans are underway for future U.S. manufacturing facilities to support U.S. military and government projects.

Contents

P.3-Customer / P.4-Engineer Capabilities / P.5-Product Features / P.6-Double Diaphragm Brake
P.8-Piston Cylinder Brake / P.10-Air Disc Brake / P.11-Service Brake / P.12-Hub & Drum, Disc Assembly
P.13-New Technology Over Convention / P.14-Proper Installation / P.15-Proper Brake Adjustment
P.16-Torque Chart & Product ID / P.17-Performance Chart / P.18-Warranty Support

DURA X MAX®

The Brand, Shaping The Future of SAFETY

World leading technology and experience embodies World class quality product and service

OEM customers across the globe

- HYUNDAI MOTORS
- HYUNDAI MOBIS
- HYUNDAI DYMOS

- KIA MOTORS
- S&T DYNAMICS
- SANGSIN BRAKE
- HYUNDAI TRANSLEAD

- MITSUBISHI FUSO
- FAW
- DANA

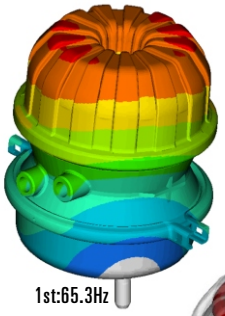

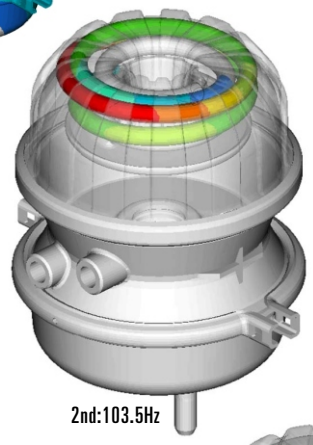

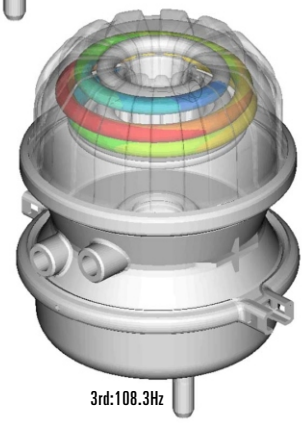

DESIGN

CATIA V5
Auto CAD
CAM
3D

TESTING

Environment Chamber Test (-40C - 80C)
Power Spring Rapid Cycle Test (Fatigue Test)
Salt Spray Corrosion Test
Dust Test
Burst Test
Dynamo Test
Ambient Cycle Test
Vibration Test
High Pressure Water Spray Test (2312psi/160bar)
Volume Test

GUAGE

UTM
CMM
3D Imaging Machine
3D & 2D Measuring Machine
Surface Probe Test
Ultrasonic Thickness Test

DURA X MAX®
The Brand, Shaping The Future of SAFETY

PRODUCTS

- Double Diaphragm Brake
- Piston Cylinder Spring Brake
- Air Disc Brake
- Service Brake
- Remote Brake Chamber
- Hub & Drum Disc Assemblies
- Adapter, Flywheel, Pulse Ring & Others

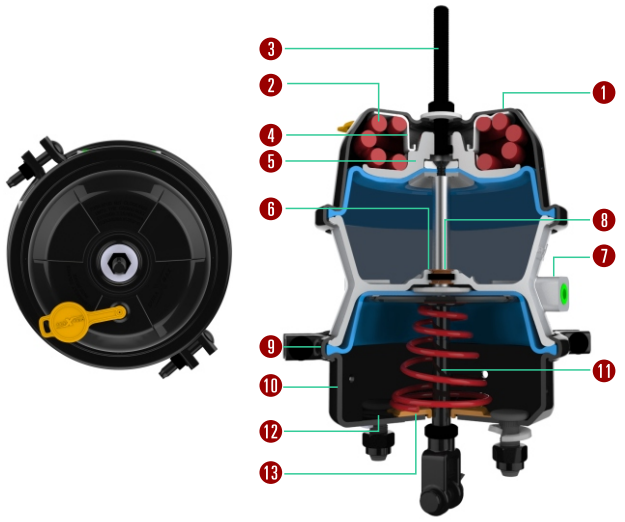

Double Diaphragm Brake Construction

1. Head Housing (HEAD)
2. Actuator Spring (POWER SPRING)
3. Caging Bolt (RELEASE BOLT)
4. Spring Seat (SPRING GUIDE)
5. Piston
6. Piston Rod Seal
7. Adaptor Housing (FLANGE CASE)
8. Piston Rod Guide
9. Clamp Band
10. Bottom Housing (Non-Pressure Chamber)
11. Push Rod
12. Mounting Bolt - Welded
13. Push Rod Guide

PARTS

- Head Housing - (Head)
- Spring Seat - (Spring Guide)
- Actuator Spring - (Power Spring)
- Adaptor Housing
- Diaphragm
- Piston
- Piston Rod Seal
- Clamp Band
- Mounting Bolt - Welded
- Push Rod Seal

FEATURES

- Deforming Prevention Reinforced Design
- Proper Seating Guide Integral Design
- Non Coil-Clash Extreme Life Design
- Advanced Thread Technology
- Heavy Duty Fabric Reinforced Design
- Durable Dispersion Contact Design
- Nitrile Rubber Seal Guide
- Torque Secure Lock-in Design
- Vibration Protection Welded MTG Bolt
- Better Alignment Integral Composite Guide

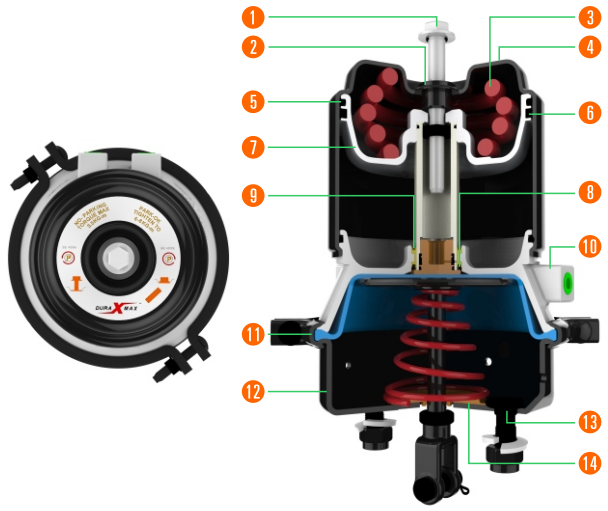

Piston Spring Brake Construction

1. Caging Bolt (RELEASE BOLT)
2. Boss Head
3. Actuator Spring (POWER SPRING)
4. Head Housing (HEAD)
5. O-Ring Piston
6. Piston Seal
7. Piston
8. Piston Rod Guide
9. Piston Rod Seal
10. Adaptor Housing
11. Clamp Band
12. Bottom Housing (Non-Pressure Chamber)
13. Mounting Bolt - Welded
14. Push Rod Guide

PARTS

- Caging Bolt - (Release Bolt)
- Boss Head
- Actuator Spring -(Power Spring)
- Head Housing -(Head)
- Piston O-Ring & Seal Piston
- Piston Rod Guide
- Piston Rod Seal
- Adoptor Housing - (Flange Case)
- Clamp Band
- Bottom Housing - (Non-Pressure Chamber)
- Mounting Bolt - Welded
- Push Rod Guide
- Diaphragm

FEATURES

- Minimal Protrusion Integral Design
- High Pressure Resistance Seal Design
- Non Coil-Clash & Highest Force-Out Design
- Deforming Prevention Reinforced Design
- High Pressure Resistance Design
- Efficient Alignment Polymer Guide
- Nitrile Rubber Seal Guide
- Advanced Thread Technology
- Torque Secure Lock-in Design
- 8 Gauge Standard
- Vibration Protection Welded MTG Bolt
- Better Alignment Integral Composite Guide
- Heavy Duty Fabric Reinforced Design

DURA X MAX®

Extreme Life Cycle & Industry's Trust Brand

Top View

Non Coil Clash Power Spring Design gives Extreme Long Life Cycles

Non Coil-Clash Integral Design Power Spring Guide

Temper Resistant Design Standard

Lock-In Design Clamp Band Secures from the Leak

Self-Correcting Alignment Nitrile Rubber Seal & Guide Assembly

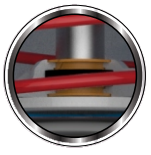

Adopt Advanced Thread Technology for better Mechanical Assembling Function

Integral Composite Injection Plastic Guide Guarantees Extend Durability

Welded Mounting Bolt Enhances Durability from Roadside Vibration

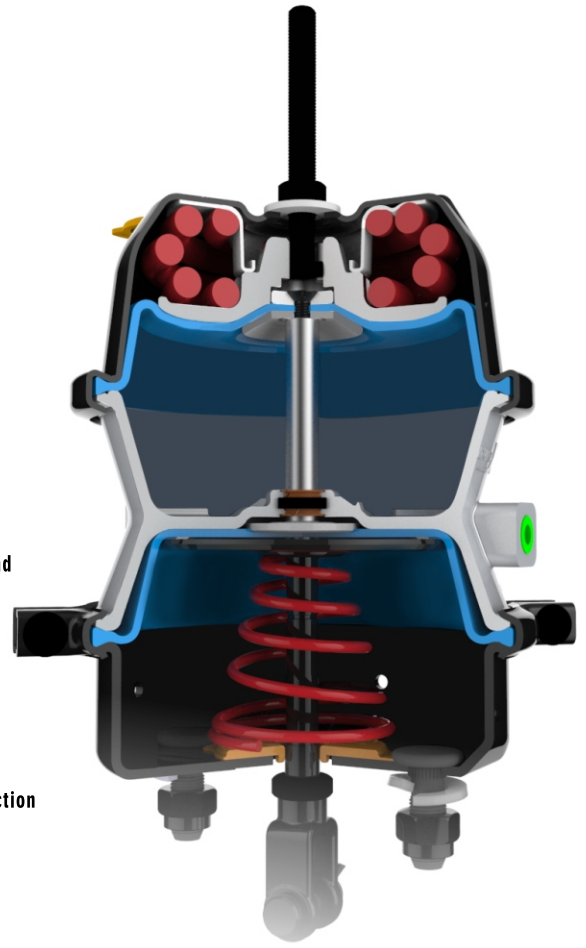

DMD Maximum Performance Double Diaphragm Brake Features

. Reinforced Design Cover Head Housing
. Heavy-Duty Bottom Housing Assembly
  8-Guage Standard
. Lock-in Design Clamp Band
. Stroke Alert Indicator
. Heavy Duty Fabric Reinforced Diaphragm
. Non Coil-Clash Long Life Super High-Force Power Spring
. Tamper Resistant Design
. Nitrile Rubber Push-Rod Seal and Guide Assembly
. Corrosion Resistance e-Coating Standard
. Integral Composite Injection Plastic Guide
. Advanced Threaded Technology Adopt Housing
. Welded Mounting Bolt

CLASSIFY	DMD2024D	DMD2424D	DMD3030D	DMD3030E
SIZE	2024	2424	3030	3030
STROKE	2.5" (63.5mm)	2.5" (63.5mm)	2.5" (63.5mm)	3" (76.2mm)
Wt. lb (kg)	15lb(6.8kg)	15.4lb(6.98kg)	20lb(9.14kg)	20.5lb(9.29kg)
1	8.58"/218mm	8.54"/217mm	9.05"/230mm	9.84"/250mm
2	6.69"/170mm	6.45"/164mm	6.73"/171mm	7.40"/188mm
3	1.55±0.05" 39.5±1.3mm	1.55±0.05" 39.5±1.3mm	1.55±0.05" 39.5±1.3mm	1.55±0.05" 39.5±1.3mm
4	1.42±0.12" 36±3mm	1.42±0.12" 36±3mm	6.38±0.12" 162±3mm	1.42±0.12" 36±3mm
5	2.68±0.12" 68±3mm	2.68±0.12" 68±3mm	7.68±0.12" 195±3mm	2.68±0.12" 68±3mm
6	4.75±0.05" 120.65±1.5mm	4.75±0.05" 120.65±1.5mm	4.75±0.05" 120.65±1.5mm	4.75±0.05" 120.65±1.5mm
7	Ø175	Ø186	Ø211	Ø211
8	Ø186	Ø186	Ø211	Ø211
A (PORT)	3/8 -18NPTF	3/8 -18NPTF	3/8 -18NPTF	M16X1.5
B (MTG BOLT)	M16X1.5	M16X1.5	M16X1.5	M16X1.5
C (P/ROD)	M16X1.5	M16X1.5	M16X1.5	M16X1.5
HOLD-OFF	6.2bar	6.2bar	6.2bar	6.2bar

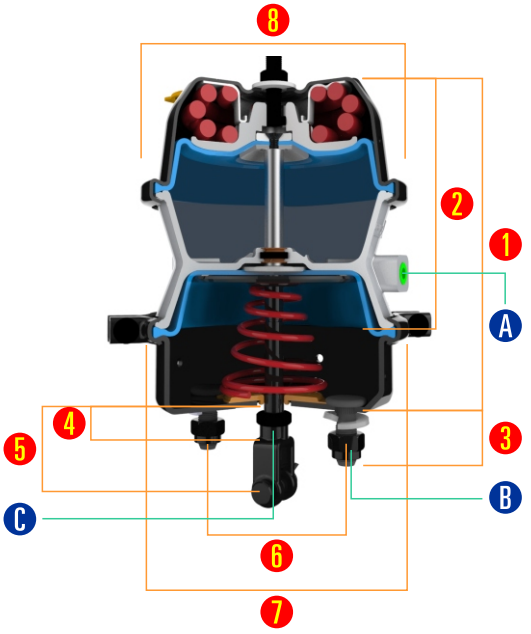

Maximum Performance Piston Cylinder Brake

Top View

Dual Seal Design allows self-correct Alignment

Integral Release Bolt Mechanism allows Minimal Bolt Protrusion 1.25" (31.8 mm)

Internal Breathing Technology System Guarantees 100% free from Contamination

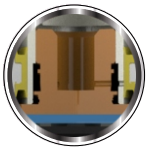

Non Coil-Clash Designed Power Spring Guarantees Extreme Long Life Cycles

Temper Resistant Design Standard with High Pressure Leak Prevention Seal Design

Lock-In Design Clamp Band Secures from the Leak

Integral Composite Injection Plastic Guide Guarantees Extend Durability

Welded Mounting Bolt enhances durability from roadside vibration

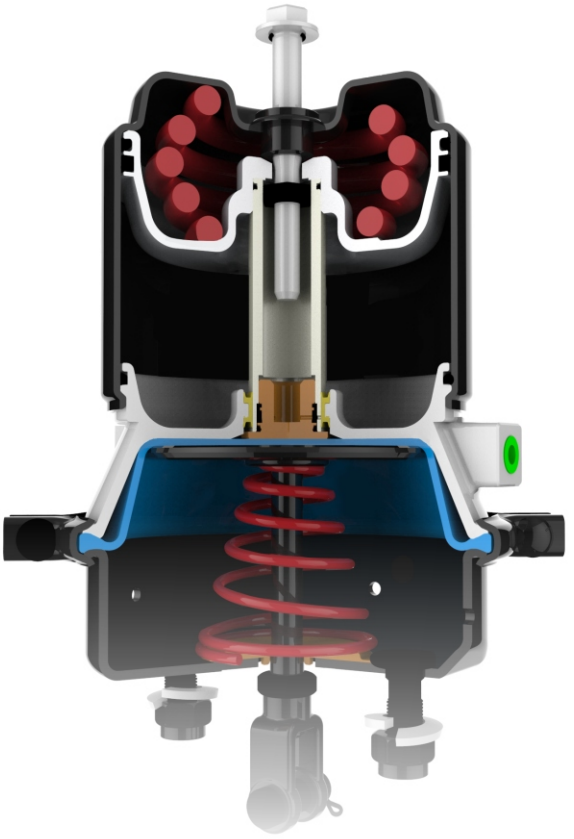

DMP Maximum Performance Piston Cylinder Brake Features

. Tamper Resistant Design Standard
. Lighter Weight (21.8 Lbs.)
. 3 Inch (76.2 mm) Long Stroke Benefit
. Compact Size Package
. Integral Release Bolt Mechanism for Minimal Bolt Protrusion of 1.25"(31.8 mm)
. Non Coil-Clash Power Spring Design
. Corrosion Resistance e-Coating Standard
. 1,922 - 2,600 Lbs. (871.8 kg - 1,179.3 kg) of Push Rod Braking Force @ 1.25 Inch Stroke
. Heavy Duty 8-Guage Service Brake Housing
. 100% free from Contamination-Internal Breathing Technology (Optional Tube Type)

CLASSIFY	DMPB2024 ET/EI	HDMP2424ET/EI	DMP2424EI	DMP3024 ET/EI
SIZE	2024	2424	2424	3024
STROKE	2.5" (63.5mm)	3" (76.2mm)	3" (76.2mm)	3" (76.2mm)
Wt. lb (kg)	20.0 lb (9.07kg)	20.5 lb (9.3kg)	20.2 lb (9.2kg)	21.8 lb (9.9kg)
1	11.3"/287mm	11.7"/297mm	11.89"/302mm	11.89"/302mm
2	9.92±0.12" 252±3mm	10.43±0.12" 265±3mm	10.43±0.12" 265±3mm	10.43±0.12" 265±3mm
3	7.60±0.08" 193±2mm	7.95±0.08" 202±2mm	7.95±0.08" 202±2mm	7.95±0.08" 202±2mm
4	1.5±0.08" 38±2mm	1.5±0.08" 38±2mm	1.5±0.08" 38±2mm	1.5±0.08" 38±2mm
5	0.59±0.02" 15±0.5mm	1.45±0.12" 37±3mm	1.45±0.12" 37±3mm	1.45±0.12" 37±3mm
6	-	2.68±0.12" 68±3mm	2.68±0.12" 68±3mm	2.68±0.12" 68±3mm
7	4.75±0.04" 120.7±1mm	4.75±0.04" 120.7±1mm	4.75±0.04" 120.7±1mm	4.75±0.04" 120.7±1mm
8	Ø175	Ø190	Ø190	Ø211
9	Ø171	Ø171	Ø171	Ø171
A (PORT)	M16X1.5	M16X1.5	M16X1.5	M16X1.5
B (MTG BOLT)	M16X1.5	M16X1.5	M16X1.5	M16X1.5
C (P/ROD)	-	M16X1.5	M16X1.5	M16X1.5
HOLD-OFF	4.9bar	4.9bar	4.9bar	4.9bar
Release	5.4bar	5.4bar	5.4bar	5.4bar

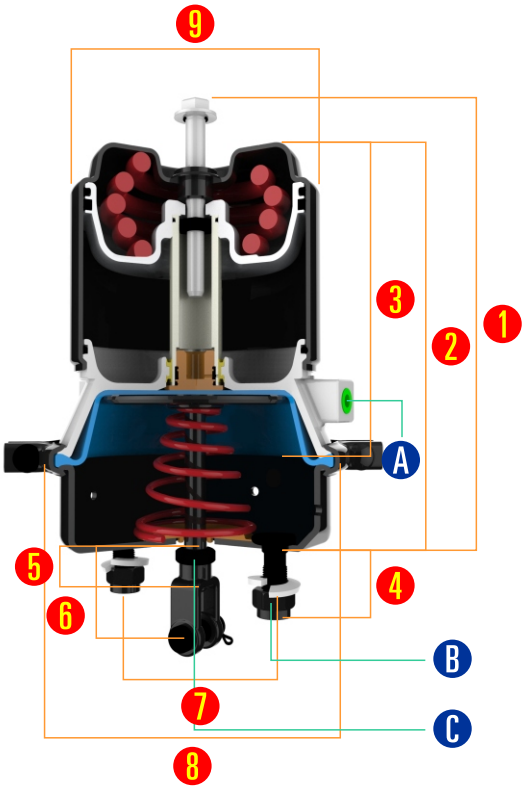

DMPB Maximum Performance Piston Air Disc Features

- *Non-Coil Clash Power Spring*
- *Increased Corrosion Resistance - Steel Head, Epoxy Coated*
- *Available with 1,922 - 2,600 Lbs. (871.8 kg - 1,179.3 kg) of Push-Rod Braking Force @ 1.25 inch (31.8mm) Stroke/Service Brake Sizes 16 - 30*
- *Heavy Duty 8 - Guage NPC Standard*
- *Integral Release Bolt Mechanism - Minimal Bolt Protrusion (Approx. 1.25 inch (31.8mm) protrusion on "Long Stroke" Models when manually released)*
- *Temper Resistant Design*
- *Lighter Weight*
- *2.5 inch Standard Stroke*
- *Compact Size*

Optional Internal B.T. Available

CLASSIFY	DMPB2024DT/DI	HDMPB2424ET/EI	DMPB2424EI	DMPB3024ET/EI
SIZE	2024	2424	2424	3024
STROKE	2.5" (63.5mm)	3" (76.2mm)	3" (76.2mm)	3" (76.2mm)
Wt. lb (kg)	20.0 lb (9.07kg)	20.5 lb (9.3kg)	20.2 lb (9.2kg)	21.8 lb (9.9kg)
1	11.3"/287mm	11.7"/297mm	11.89"/302mm	11.89"/302mm
2	9.92±0.12" 252±3mm	10.43±0.12" 265±3mm	10.43±0.12" 265±3mm	10.43±0.12" 265±3mm
3	7.60±0.08" 193±2mm	7.95±0.08" 202±2mm	7.95±0.08" 202±2mm	7.95±0.08" 202±2mm
4	1.5±0.08" 38±2mm	1.5±0.08" 38±2mm	1.5±0.08" 38±2mm	1.5±0.08" 38±2mm
5	0.59±0.02" 15±0.5mm	1.45±0.12" 37±3mm	1.45±0.12" 37±3mm	1.45±0.12" 37±3mm
6	4.75±0.04" 120.7±1mm	4.75±0.04" 120.7±1mm	4.75±0.04" 120.7±1mm	4.75±0.04" 120.7±1mm
7	Ø175	Ø190	Ø190	Ø211
8	Ø171	Ø171	Ø171	Ø171
A (PORT)	M16X1.5	M16X1.5	M16X1.5	M16X1.5
B (MTG BOLT)	M16X1.5	M16X1.5	M16X1.5	M16X1.5
C (P/ROD)	-	-	-	-
HOLD-OFF	4.9bar	4.9bar	4.9bar	4.9bar
Release	5.4bar	5.4bar	5.4bar	5.4bar

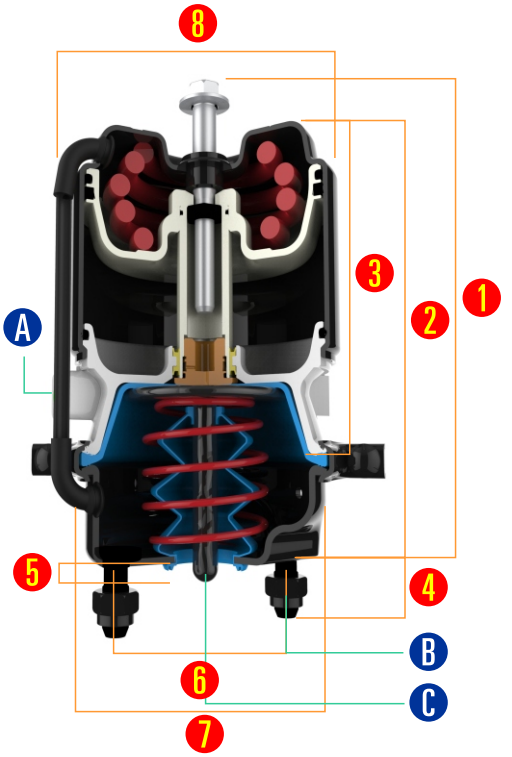

DMS Maximum Performance Service Brakes Features

- *Formed Steel Pressure Cap*
- *Corrosion Resistance e-Coating Standard*
- *Formed Steel Non-Pressure Chamber*
- *Heavy - Duty Nylon Reinforced Diaphragm*
- *Top and Side Air Ports - 3/8" NPTF*
- *Center Hole Shield*

CLASSIFY	DMS20D	DMS24D	DMS24E	DMS30D

SIZE	20	24	24	30
STROKE	2.5" (63.5mm)	2.5" (63.5mm)	3" (76.2mm)	2.5" (63.5mm)
Wt. lb (kg)	6.92 lb (3.14kg)	8 lb (3.65kg)	8.8 lb (4kg)	10.1 lb (4.6kg)
1	4.39"/111.5mm	4.65"/118mm	5.12"/130mm	4.83"/122.7mm
2	3.66±0.12" 93±3mm	4.02±0.12" 102±3mm	4.50±0.12" 114.5±3mm	4.21±0.12" 107±3mm
3	1.54±0.05" 39±3mm	1.54±0.05" 39±3mm	1.54±0.05" 39±3mm	1.54±0.05" 39±3mm
4	1.45±0.12" 37±3mm	1.41±0.12" 37±3mm	1.45±0.12" 37±3mm	1.41±0.12" 37±3mm
5	2.68±0.12" 68±3mm	2.68±0.12" 68±3mm	2.68±0.12" 68±3mm	2.68±0.12" 68±3mm
6	4.75±0.06" 120.65±1.5mm	4.75±0.06" 120.65±1.5mm	4.75±0.04" 120.7±1mm	4.75±0.06" 120.65±1.5mm
A (PORT)	3/8-18NPTF	3/8-18NPTF	M16X1.5	3/8-18NPTF
B (MTG BOLT)	M16X1.5	M16X1.5	M16X1.5	M16X1.5
C (P/ROD)	M16X1.5	M16X1.5	M16X1.5	M16X1.5

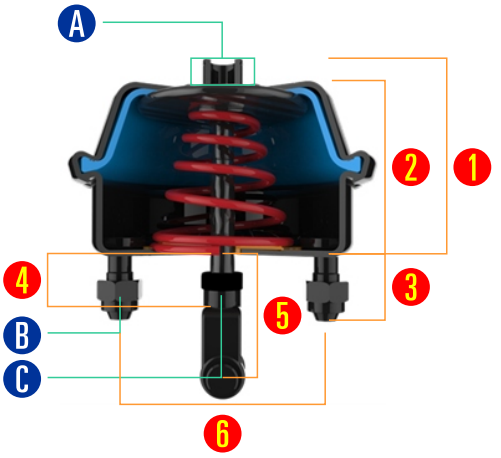

2.5T FRONT

Medium Truck

Ø 320 x 110

3.5T REAR

Medium Truck

Ø 320 x 110

Heavy Duty REAR

Heavy Truck

Ø 410 / Ø 430

Heavy Duty HUB & DISC

Heavy Truck

Ø 430

Creating an entirely new design meant not destroying fundamentals.

DMP3024ET

DMP3024EI

DMPB2424DI

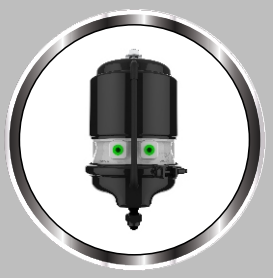
DMPB2424DT

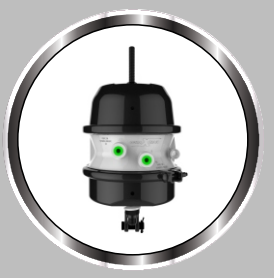
DMD3030D

DMS20D

DMS30D

Class 5-7 Front Hub & Disc and Hub & Drum Assembly

Class 5-7 Rear Hub & Drum Assembly

Class 8 Rear Hub & Drum and Hub & Disc Assembly

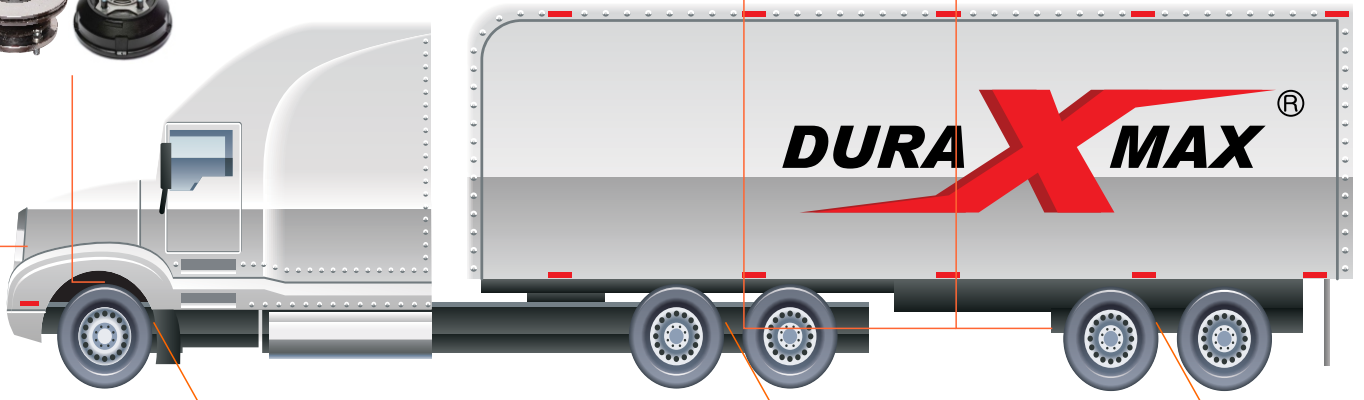

Fly Wheel

Service Brake

Double Diaphragm Brake

Piston Cylinder Brake

DURA X MAX®
The Brand, Shaping The Future of SAFETY
www.duraXmax.com

DMDxxxx Series Double Diaphragm Combination Spring Brake INSTALLATION and INSPECTION MANUAL

⚠ CAUTION : High compressor spring is loaded inside of the Spring Brake. It is VERY IMPORTANT to read all the manuals and follow the instruction. Releasing piggyback or spring chamber forcefully without proper instruction may cause death, severe personal injury and/or property damage. If Spring Brake is not caged, mounting Nut and Clamp Nut should never be released. May cause severe injury.

IMPORTANT NOTIFICATION for Installation

Prior to installation, it is mandatory that the Spring Brake is caged. If not caged, must be done before the installation. To maximize the life of the Spring Brakes, we highly recommend you to follow the service manual when installing the product to your vehicle. When installing the Spring Brake on to horizon type of bracket, the minimum contact surface needs to be gratified. When vertical aligned bracket and mounting bolt is demanded, the minimum contact space is lesser than horizontal type of bracket. Always mount the brake chamber directly on the bracket. DO NOT add or insert shims, spacers, washers or reinforcing plates between the bracket and the brake chamber.

1. Caging Bolt
2. Cover, Head Housing
3. Caging Bolt Pocket
4. Clamp Bolt
5. Mounting Washer
6. Mounting Nut

7. Mounting Bolt
8. Push Rod
9. Yoke Nut
10. Yoke (Clevis)
11. Yoke Pin
12. Split Pin

REMOVAL Instruction

1. Always block wheels when working on brake to prevent vehicle rollaway.
2. After removing the parking brake (apply vehicle or shop pressure 6.2 ~8.3 bar (90~120 psi/620~830 kPa minimum, to the emergency parking brake. Maintain vehicle or shop air pressure)), unscrew the caging nut counterclockwise from the side of the chamber housing using ¾ inch (19mm) wrench. Open the head cover and use caging bolt to cage the spring brake. (If air leaks from the spring brake, you can manually cage the spring brake by using caging bolt). Loose connection between the yoke pin and slack adjuster is enough.
3. Turn on the parking brake on the vehicle. This is to exhaust all the air from inside of the spring brake.
4. Following the manufacturer's instructions exactly, using spanner wrench, release the air hose and the connector from the chamber.
5. Remove the split pin and the yoke(clevis) pin from the yoke
6. Using a 15/16 inch socket wrench, unscrew the mounting bolt counterclockwise and cautiously remove the old chamber.

INSTALLATION of Spring Brake Chamber to Mounting Bracket

Prior to spring brake chamber installation, insure the spring brake is caged (power spring caged), and the service brake pushrod is fully retracted to zero stroke position.
DETERMINE CORRECT PUSHROD LENGTH: Follow the manufacturer's instruction or if the old brake chamber was properly installed, use the old brake measurement to determine the proper pushrod length. The measurement must be equal to replacing brake chamber.

1. Measure the bottom housing and record the end of pushrod (A) to center line of York pin (B) from the previous chamber. Spring Brake MUST BE caged completely for the measurement.
2. If the measurement needs to be readjusted, use the measurement from 1) above to cut the pushrod. Mark the correct length on the pushrod. Use the York nut to facilitate marking the correct length and cut the pushrod. Attach the York nut or York(clevis) to the pushrod.
3. To ensure the flatness of the mounting bracket surface, inspect the bracket mounting. The bracket must be free from excessive debris, burr, cracks, and welding burn mark. The bracket must also be flat to 1/64" (0.4mm)
4. Install the spring brake chamber to mounting bracket of the axle and insert the mounting washer. After inserting the mounting washer, using 24mm (15/16 inch) socket wrench, screw the mounting nut clockwise. Recommended torque is 18~21kgf.m(133~155 lbf.ft). Be careful not to install the mounting washer between the chamber and the bracket.

5. Make sure the location of the yoke nut and yoke at the pushrod, position the yoke hole to slack adjuster and make sure the external diameter of the yoke pin and assemble the split pin. Hold yoke to prevent it from turning and tighten yoke nut to 6~7Kgf.m (45~50 lbf.ft) torque

IMPORTANT: If the yoke hole at the pushrod doesn't reach slack adjuster hole, DO NOT ATTEMPT to pull the pushrod physically (by force).

6. Using Loctite glue or Taflon tape, tighten the chamber fitting at 3.6kgf.m (25lbf.ft) torque. Connect the correct air hose to each position.
7. After charging the air tank to 6.2 ~ 8.3 bar (90~120 psi/620 ~ 830kPa, release the parking brake (parking level off), I,e, charge the spring chamber, remove the caging bolt and torque the pocket at side at 1.4Kgf.m (10 lbf.ft). Close the cover for the head housing.

INSTALLATION Inspection 1. After charging the air to air tank to 6.2 ~ 8.3 bar (90~120 psi/620 ~ 830 kPa, release the parking brake. Using the soapy water (NEVER ANY TYPE OF OIL)

inspect air leaks at air lines and fitting and also at air lines and fitting for the service foot brake.

2. Following your vehicle manufacturer's instruction, contact brake drum and lining by turning the slack adjuster and adjust the stroke.
3. When Brake OFF: Angle of the pushrod and slack adjuster must always be greater than 90°
4. When Brake ON: Angle of the pushrod and slack adjuster cannot be less than 90 °

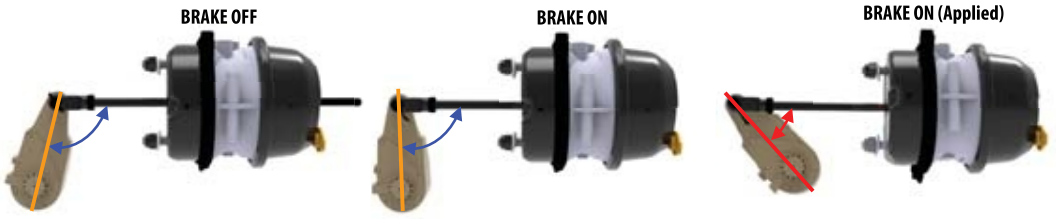

CORRECT INSTALLED

INCORRECT INSTALLED

SAFE SCRAP old Spring Brake

1. All retired spring brake chamber must be safely disarmed before they are disposed of to prevent serious personal injury from accidental sudden release of the high energy spring.
2. To dispose the spring chamber, place it in the steel container and close it. Using gas radiator to cut through the head housing and cut the actuator spring.

BRAKES "OFF" - NOT APPLIED

Angle must always be greater than 90° due to various slack adjuster lengths and installation setups. (Refer to axle or OEM manufacturer's manual for recommended angle)
Stroke should be as short as possible with no lining to drum contact.

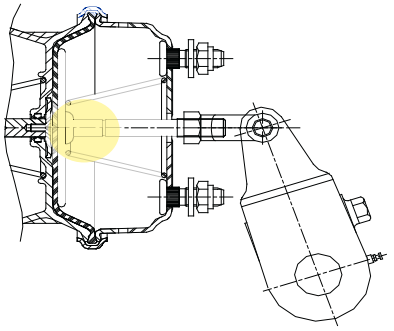

PROPERLY - ADJUSTED BRAKES "ON" - APPLIED

To check brake adjustment, apply 90 to 100 psi (6.2 - 6.9 bars) air pressure to the service chamber. Consult the vehicle manufacturer for the correct angle between the slack adjuster arm and push-rod and/or the push-rod length.

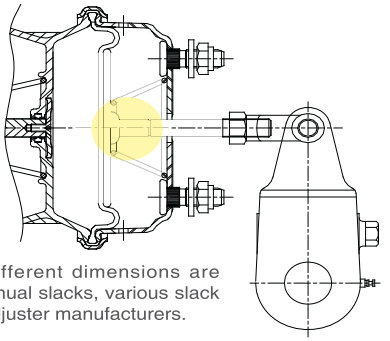

This is necessary since different dimensions are required for automatic or manual slacks, various slack lengths and different slack adjuster manufacturers.

IMPROPERLY ADJUSTED BRAKES "ON" - APPLIED

Maximum recommended readjustment stroke has been exceeded)

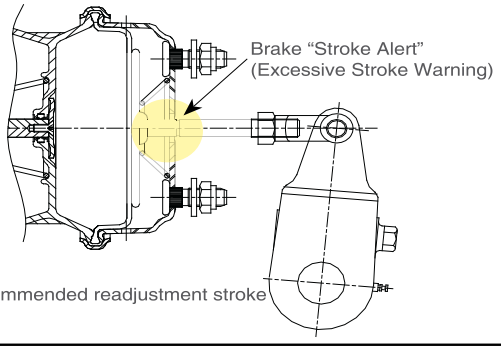

See chart for recommended readjustment stroke

Type	Effective Area (SQ. IN.)	Approx. Diaphragm O.D. Inches	mm	Rated Stroke of Chamber Inches	mm	Maximum Stroke with Brakes Adjusted	"B" MV/MA Recommended Readjustment Stroke Inches	mm
9	9	5.00	125	1.75	45	SHOULD BE AS SHORTAS POSSIBLE WITHOUT LINING TO DRUM CONTACT	1.35	35
12	12	5.50	140	1.75	45		1.35	35
16	16	6.00	150	2.25	57		1.75	45
16L	16	6.00	150	2.50	64		2.00	51
20	20	6.50	165	2.25	57		1.75	45
20L	20	6.50	165	2.50	64		2.00	51
24	24	7.00	175	2.25	57		1.75	45
24L	24	7.00	175	2.50	64		2.00	51
24L3	24	7.00	175	3.00	76		2.50	64
30	30	8.00	200	2.50	64		2.00	51
30L3	30	8.00	200	3.00	76		2.50	64
36	36	9.00	230	3.00	76		2.25	57

SOURCE: MVMA (Motor Vehicle Manufacturers Association)

Note: The push-rod must remain perpendicular to the bottom surface of the non-pressure chamber (NPC) within 3 zero to full stroke.

FASTENER TORQUE VALUE CHART

BOLT TORQUES			
Component	*Bolt Size*	*Foot/Pounds of Torque*	*Newton/Meters of Torque*
Release Bolts			
- CAGING TORQUE			
DMD Models	1/2 - 13 UNC	40-50	54-68
DMD Models	5/8 - 11 UNC	40-50	54-68
DMP Models	5/8 18 UNF / 1/2 - 13 UNC	74 Max.	100 Max.
- STORAGE TORQUE			
DMD Models	1/2 - 13 UNC	10	14
DMD Models	5/8 - 11 UNC	10	14
DMP Models		50-60	68-81
Clamp Band Nuts & Bolts			
	5/16 - 24 UNF	18-23	24-31
	3/8 - 16 UNC	30-35	41-47
Yoke Nuts			
	1/2 - 20 UNF	20 - 30	27 - 41
	5/8 - 18 UNF	25 - 50	34 - 68
	3/4 - 16 UNF	75 - 100	102 - 136
	M16 X 1.5 - 6G	25 - 50	34 - 68
Mounting Nuts & Bolts			
	7/16 - 14 UNC	35-40	47-54
	5/8 - 11 UNC	133-155	180-210
	5/8 18 UNF	133-155	180-210
	M16 X 1.5 - 6G	133-155	180-210
Air Inlet Fitings			
	3/8 - 18 NPTF	25 - 30	34 - 40
	3/8 - 24 UNF	17 - 19	23 - 26
	M16 X 1.5- 6H	13 - 15	18 - 20

Warning
Do not! use impact wrench.

PRODUCT IDENTIFICATION

On all DMD and DMP models the I.D. is engraved to the center section aluminum casting.
On all DMS models the I.D. is engraved to the pressure cap or to the clamp band.
See the illustrations below for I.D. locations.

21000-A2H00 — **Mfg. Part Number**
M012512 — **OEM Part Number**
YMDXXX — **Date Code**

Note:
Product information and specications subject to change without notice.

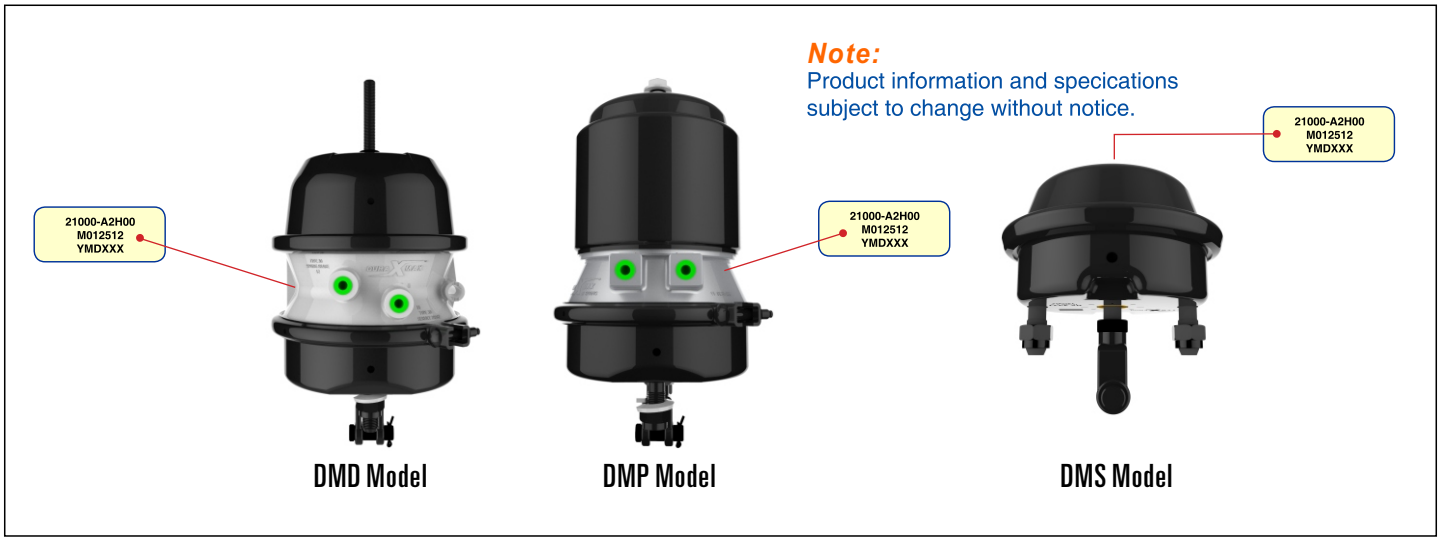

PERFORMANCE CHART - SPRING BRAKE CHAMBERS

METRIC

DOUBLE DIAPHRAGM SPRING BRAKE CHAMBER

MODELS (d)	Spring Chamber Size	Rated Service Stroke(mm)	Vol. Displ. @ 6.89 bar (cm3) (a)	Hold-Off Pressure Required (bar) (b)	Spring Brake Force-Output (Newtons) @ mm. of Stroke (c)(d)									Newton-meters of Torque Applied @ 31.8mm Stroke by S-Cam Camshaft w/ Slack Adjuster Length of (mm)**			
DMDxx24	24	63.5	1248.7	5.4	5694	5382	5115	4804	4448	3737	2758	-	-	684	752	820	889
DMDxx30	30	63.5	1668	4.4	6717	6316	5956	5591	5213	4822	4422	-	-	802	882	963	1043

PISTON CYLINDER SPRING BRAKE CHAMBER

DMPxx24	24	76.2	1614.1	4.9	8896	8549	8194	7878	7544	7148	6797	6445	6094	1086	1194	1303	1412

DOUBLE DIAPHRAGM SPRING BRAKE CHAMBER

MODELS (g)	Rated Service Stroke (mm) (e)	Vol. Displ. @ 6.89 bar Rated Service Stroke(cm3)	Application Pressure of (bar)	Service Brake Force-Output (Newtons) @ mm. Stroke (f)									Newton-meters of Torque Applied @ 31.8mm Stroke by S-Cam Camshaft w/ Slack Adjuster Length of (mm)**			
DMD24xxL	63.5	1143.8	1.4	1610	1655	1686	1677	1624	1495	1237	-	-	210	231	252	273
DMD30xx	63.5	1425.7	1.4	2340	2349	2349	2291	2175	1899	1290	-	-	298	328	358	388

PISTON CYLINDER SPRING BRAKE CHAMBER

DMP24xx	76.2	1363.4	1.4	1579	1592	1637	1673	1681	1641	1561	1450	1094	202	222	243	263

SERVICE CHAMBER

S24L	63.5	1140.5	1.4	1610	1655	1686	1677	1624	1495	1237	-	-	210	231	252	273
S30	76.2	1363.4	1.4	2340	2349	2349	2291	2175	1899	1290	-	-	298	328	358	388
S24L3	76.2	1363.4	1.4	1579	1592	1637	1673	1681	1641	1561	1450	1094	202	222	243	

SAE

DOUBLE DIAPHRAGM SPRING BRAKE CHAMBER

MODELS (d)	Spring Chamber Size	Rated Service Stroke(in)	Vol. Displ. @100psi (in3) (a)	Hold-Off Pressure Required (bar) (b)	Spring Brake Force-Output (Pounds-Force) @ in. of Stroke (c)									in-lbs. of Torque Applied @ 1.25" Stroke by S-Cam Camshaft w/Slack Adjuster Length of (in)**			
					1.00	1.25	1.50	1.75	2.00	2.25	2.50	2.75	3.00	5.00	5.50	6.00	6.50
DMD2024	24	2.25	76.2	78	1280	1210	1150	1082	1000	840	-	-	-	6050	6655	7260	7865
DMDxx30	30	2.50	101.8	64	1510	1420	1339	1257	1172	1084	994	-	-	7100	7810	8520	9230

PISTON CYLINDER SPRING BRAKE CHAMBER

DMPxx24	24	3.00	98.5	71	2000	1922	1842	1771	1696	1607	1528	1449	1370	9610	10571	11532	12493

DOUBLE DIAPHRAGM SPRING BRAKE CHAMBER

MODELS	Rated Service Stroke (in)	Vol. Displ. @ 100psi Rated Service Stroke (in3) (e)	Application Pressure of (psi)	Service Brake Force-Output (Pounds-Force) @ in. of Stroke (f)									in-lbs. of Torque Applied @ 1.25" Stroke by S-Cam Camshaft w/Slack Adjuster Length of (in)**			
DMD24xxL	2.50	69.8	20	362	372	379	377	365	336	278	-	-	1860	2046	2232	2418
DMD30xx	2.50	87	20	526	528	528	515	489	427	290	-	-	2640	2904	3168	3432

PISTON CYLINDER SPRING BRAKE CHAMBER

MODELS	Rated Service Stroke(in)(e)	Vol. Displ.@ 100psi Rated Service Stroke(in3)(e)	Ap-plication pressure of (psi)	Service Brake Force-Output (Pounds-Force) @ in. of Stroke (f)									in-lbs. of Torque Applied @ 1.25" Stroke by S-Cam Camshaft w/Slack Adjuster Length of (in)**			
				1.00	1.25	1.50	1.75	2.00	2.25	2.50	2.75	3.00	5.00	5.50	6.00	6.50
DMP24xx	3.00	83.2	20	355	358	368	376	378	369	351	326	246	1840	2024	2208	2392

SERVICE CHAMBER

S24L	2.50	69.6	20	362	372	379	377	365	336	278	-	-	1860	2046	2232	2418
S30	2.50	90.1	20	526	528	528	515	489	427	290	-	-	2640	2904	3168	3432
S24L3	3.00	83.2	20	355	358	368	376	378	369	351	326	246	1840	2024	2208	2392

DURAMAX DMDXXX Series Double Diaphragm PRODUCT WARRANTY

Mirae VC, Inc. U.S.A. warrants that all new Air Spring Brake Actuator manufactured by Mirae VC., Co. Ltd in Korea or/and manufactured by Mirae VC, Inc. in the U.S.A. to be free from defects in material and workmanship from the date of manufacture, when product is properly installed, placed under normal service condition and use within the correct environment of vehicle application

Mirae VC, Inc. warrants to the original purchaser will be free from defects in materials or workmanship for the warranty periods shown below whichever occurs first.

3 Years / 300,000 Miles (480,00 Km) / 10,600 Hours
Interstate Truck & Bus, Line Haul Tractor, P&D Truck & Tractor, Intercity Truck, Charter Bus, Trailer, School Bus

2 Years / 200,000 Miles (320,000 Km) / 7.200 Hours
Transit Bus, Refuse Haul, Dump Truck, Cement Mixer, Off Highway Operation etc.

LIMITATION OF WARRANTY

1. This warranty applies exclusively to Duramax brand Air Spring Brake Actuators sold for use within the North America continent.
2. This warranty does not apply to parts and assemblies which have been subjected to damage by accident, or misuse, improper installation, abnormal service, fire, or improper repair, tampering, abuse. or any alterations made by other than Mirae. (The liability under this Warranty Policy shall not exceed puchase price paid.)
3. This warranty does not cover claims for excessive amounts of foreign material ingestion into spring cavities of unsealed actuators as a normal result of operation.
4. This Warranty does not cover failure of product due to a defect in the design, plans, specifications were supplied to Mirae by buyer.
5. Mirae reserves the right to make changes in the design and improvements to poducts including additions without incurring any obligation to modify or make changes ot products previously sold.
6. Responsibilty of Mirae under this Warranty Policy is limited to the repair or replacement of the defective part or assembly. Mirae does not responsible for down time expenses, labor, business costs or losess of use, or any kind of cargo damages.

WARRANTY CLAIMS PROCESS

1. Coverage and Direction please contact customer service at *1-877-852-3373* or email to *customerservice@duraXmax.com*, or contact your local Sales and Distributors.
2. If Mirae determines brake actuator was defective in material or workmanship within the warranty period then Mirae shall repair or replace actuator with prepaid returned freight.
3. If Mirae requires that all claimed parts or assemblies should be returned to Mirae VC, Inc. customer service freight prepaid for detail evaluation or to evaluate the warranty claim in the field at Mirae's option.
4. The determination of warranty is made solely at Mirae's disposition.
5. Product shall returned to Mirae for evaluation must br accompanied by returned material authorization (RMA) as suppllied by Mirae VC, Inc. customer service. RMA number can be obtained by contacting Mirae USA customer service.
6. Warranty must be made in writing and warranty claims must received by Mirae within 90 days of failure of the brake actuator
7. Mirae reserves the right to have any claimed parts or assemblies returned to Mirae VC, Inc. customer service for detail analsys.
8. Warranty must be made in writing and warranty claims must received by Mirae within 90 days from the date of failure.

DISCLAIMER OF OTHER WARRANTIES

THIS WARRANTY IS EXPRESSLY IN LIEU OF ALL OTHER WARRANTIES EITHER EXPRESSED OR IMPLIED. ALL OTHER WARRANTIES, EXPRESSED OR IMPLIED, INCLUDING ANY IMPLIED WARRANTY OR MERCHANTABILITY OR FITNESS FOR A PARTICULAR PURPOSE, AND ALL OTHER OBLIGATIONS OR LIABILITIES, INCLUDING LIABILITY FOR INCIDENTAL, SPECIAL, CONSEQUENTIAL DAMAGES OR LABOR ARE HEREBY EXCLUDED AND EXPRESSLY DISCLAIMED

Duramax / Mirae VC, Inc.
A divison of Mirae VC Co., Ltd.
1865 Corporate Dr. Ste 230 Norcross, GA 30093
Toll Free 1-877-852-3373 Fax (470) 395-7824
www.duraXmax.com

© 2015 Duramax® Mirae VC, Inc.

Duramax certified ISO 140001 and continue to make efforts to protcet the environment

The Brand, Shaping The Future of SAFETY

DURA X MAX®

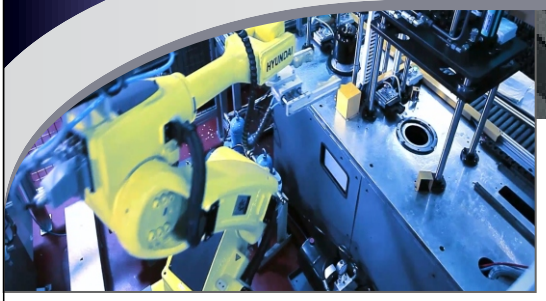

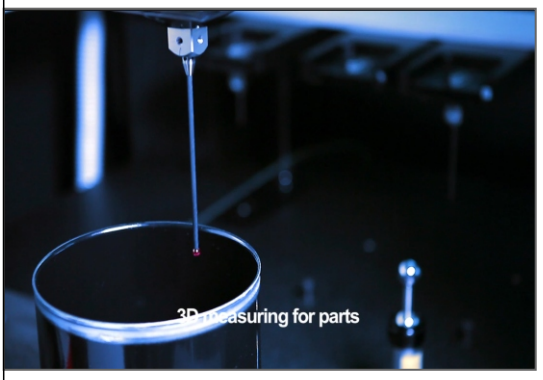

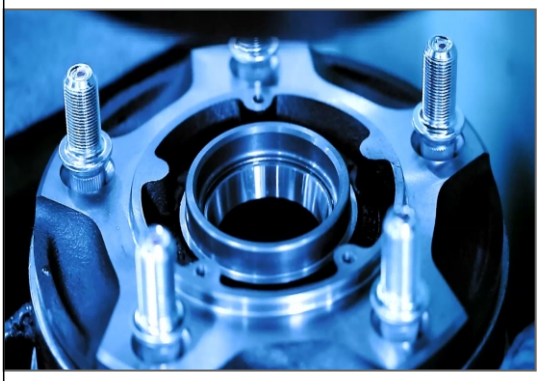

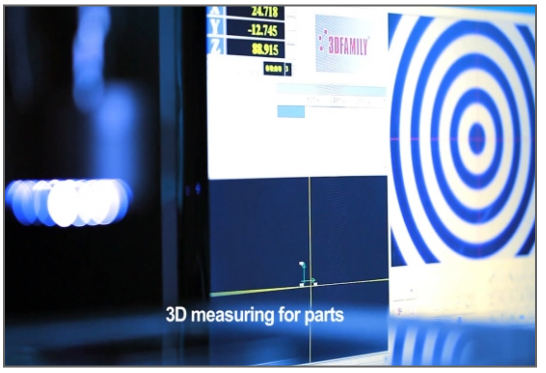

DURAMAX®

DuraMax / Mirae VC, Inc.
A Division of Mirae VC Co., Ltd.

1865 Corporate Dr. # 230, Norcross, GA 30093 Toll Free : 1.877.852.3373 Fax : 470.395.7824 www.duramax.com

kiwa
Partner for progress

CERMET
Certificazione e ricerca per la qualità

Duramax certified ISO 14001:2004 *and continue to make efforts to protect the environment.*

SAI GLOBAL

Duramax is compliance with the standard ISO/TS 16949:2009